Digital Absolute Pressure Sensor

KP254

dBAP

Digital Barometric Air Pressure Sensor IC

Data Sheet

Revision 1.1, 2015-07-29

Sense & Control

Table of Contents

1 Product Description . . . 5
1.1 Features . . . 5
1.2 Target Applications . . . 5
2 Functional Description . . . 6
2.1 Pin Configuration . . . 6
2.2 Pin Description . . . 6
2.3 Block Diagram . . . 7
2.4 Transfer Function Pressure . . . 7
2.4.1 Pressure Transfer Function Characteristics . . . 8
2.4.2 Accuracy . . . 8
2.5 Transfer Function Temperature . . . 9
2.5.1 Temperature Transfer Function Characteristics . . . 9
2.6 Serial Interface . . . 10
2.6.1 Commands . . . 10
2.6.1.1 Command Behavior . . . 10
2.6.1.2 Structure . . . 11
2.6.1.3 Parity . . . 11
2.6.1.4 Command Definition . . . 12
2.6.1.5 Communication Error . . . 13
2.6.1.6 Identifier Response Definition . . . 13
2.6.2 Single Device Operation . . . 14
2.6.3 Daisy Chain Operation . . . 15
2.7 Start-up Behavior . . . 16
2.8 Diagnosis . . . 16
2.8.1 Diagnostic Reset . . . 17
2.8.1.1 Reset-bit C12 = ‘0‘ . . . 17
2.8.1.2 Reset-bit C12 = ‘1‘ . . . 17
2.8.2 Pressure out of Range . . . 18
2.8.3 Diag1 . . . 18
2.8.4 Diag2 . . . 18
2.8.5 E^2PROM Check . . . 19
3 Specification . . . 20
3.1 Application Circuit Example . . . 20
3.2 Absolute Maximum Ratings . . . 21
3.3 Operating Range . . . 22
3.4 Characteristics . . . 23
4 Package Information . . . 27
4.1 PG-DSOF-8-16 Outline . . . 27
4.2 Identification Code . . . 28
5 Revision History . . . 29

List of Tables

Table 1 Pin description 6
Table 2 Pressure transfer function characteristics 8
Table 3 Temperature transfer function characteristics 9
Table 4 Diagnosis codes 17
Table 5 Component values 20
Table 6 Absolute maximum ratings 21
Table 7 Operating range 22
Table 8 Electrical characteristics 23
Table 9 SPI timing 24
Table 10 Transfer function 25

List of Figures

Figure 1 Pin configuration (top view, figure not to scale) 6
Figure 2 Functional block diagram 7
Figure 3 Pressure transfer function 7
Figure 4 Accuracy for pressure acquisition 8
Figure 5 Temperature transfer function (V_{DD} = 5.0 V) 9
Figure 6 SPI timing 10
Figure 7 SPI command structure 11
Figure 8 SPI response structure 11
Figure 9 SPI response structure for identifier 11
Figure 10 Acquire pressure command 12
Figure 11 Acquire temperature command 12
Figure 12 Trigger diagnosis command 12
Figure 13 Acquire identifier command 12
Figure 14 Trigger test mode command 12
Figure 15 Response after a communication error 13
Figure 16 Identifier response definition 13
Figure 17 Example for single device operation 14
Figure 18 Example for single device signal timing 14
Figure 19 Example for daisy chain operation 15
Figure 20 Example for daisy chain signal diagram 16
Figure 21 Example for reset strategy Reset-bit C12 = ‘0‘ 17
Figure 22 Example for reset strategy Reset-bit C12 = ‘1‘ 18
Figure 23 Diag1 functionality 18
Figure 24 Diag2 functionality 19
Figure 25 Application circuit example 20
Figure 26 Package outline 27
Figure 27 Identification code 28

1 Product Description

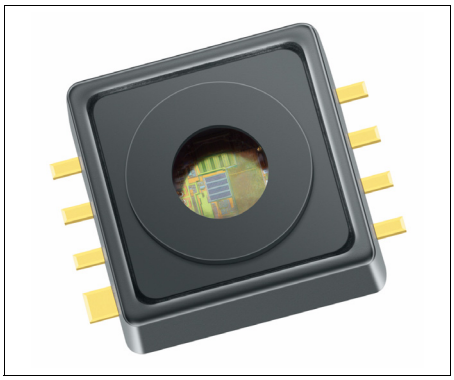

PG-DSOF-8-16

The KP254 is a miniaturized Digital Barometric Air Pressure Sensor IC based on a capacitive principle. It is surface micromachined with a monolithic integrated signal conditioning circuit implemented in BiCMOS technology.

The sensor converts a pressure into a 10-bit digital value and sends the information via the SPI interface. In addition, a temperature sensor is integrated on chip. Based on the received SPI command, the 10-bit temperature information will be transmitted via the SPI interface.

A special reliability feature is the integrated diagnostic mode, which allows testing the sensor cells as well as the signal path. This diagnosis can be simply triggered with a SPI command.

The chip is packaged in a “green” SMD housing. The sensor has been primarily developed for measuring barometric air pressure, but can also be used in other application fields. The high accuracy, high sensitivity and reliability features of the device makes it a perfect fit for advanced automotive applications as well as in industrial and consumer applications.

1.1 Features

The following features are supported by the KP254:

- High accuracy pressure sensing (± 1.5 kPa)
- Real 10-bit pressure resolution
- Integrated temperature sensor
- Real 10-bit temperature resolution
- Self diagnosis features
- “Green” 8 pin SMD housing
- Automotive qualified

1.2 Target Applications

The KP254 is designed for use in the following target applications:

- Automotive applications
- Industrial control
- Consumer applications
- Medical applications
- Weather stations
- Altimeters

Product Name	Product Type	Ordering Code	Package
Digital Absolute Pressure Sensor	KP254	SP001399094	PG-DSOF-8-16

2 Functional Description

2.1 Pin Configuration

Figure 1 shows the pin configuration.

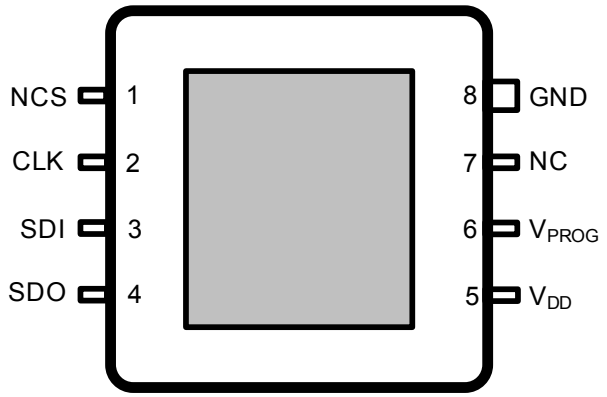

Figure 1 Pin configuration (top view, figure not to scale)

2.2 Pin Description

Table 1 shows the pin description.

Table 1 Pin description

Pin No.	Name	Function	Comment
1	NCS	Not-Chip-Select (active-low)	Communication is enabled when NCS is low
2	CLK	Serial Clock	External clock for serial communication
3	SDI	Serial Data In	Serial data input (e.g. from a controller)
4	SDO	Serial Data Out	Tri-state serial data output
5	V_{DD}	Supply voltage	–
6	V_{PROG}	Programming Voltage	Only required during E^2PROM programming
7	NC	Not Connected	Pin is not bonded
8	GND	Ground	–

2.3 Block Diagram

Figure 2 shows the functional block diagram.

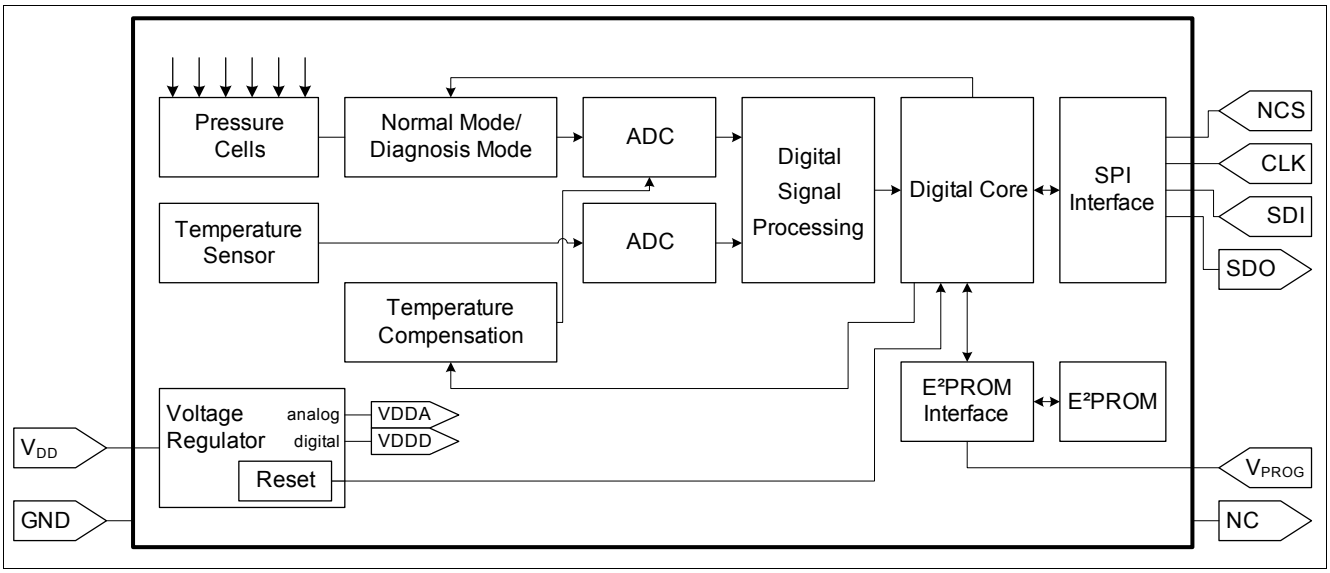

Figure 2 Functional block diagram

2.4 Transfer Function Pressure

The KP254 device is fully calibrated on delivery. The sensor has a linear transfer function between the applied pressure and the digital output signal.

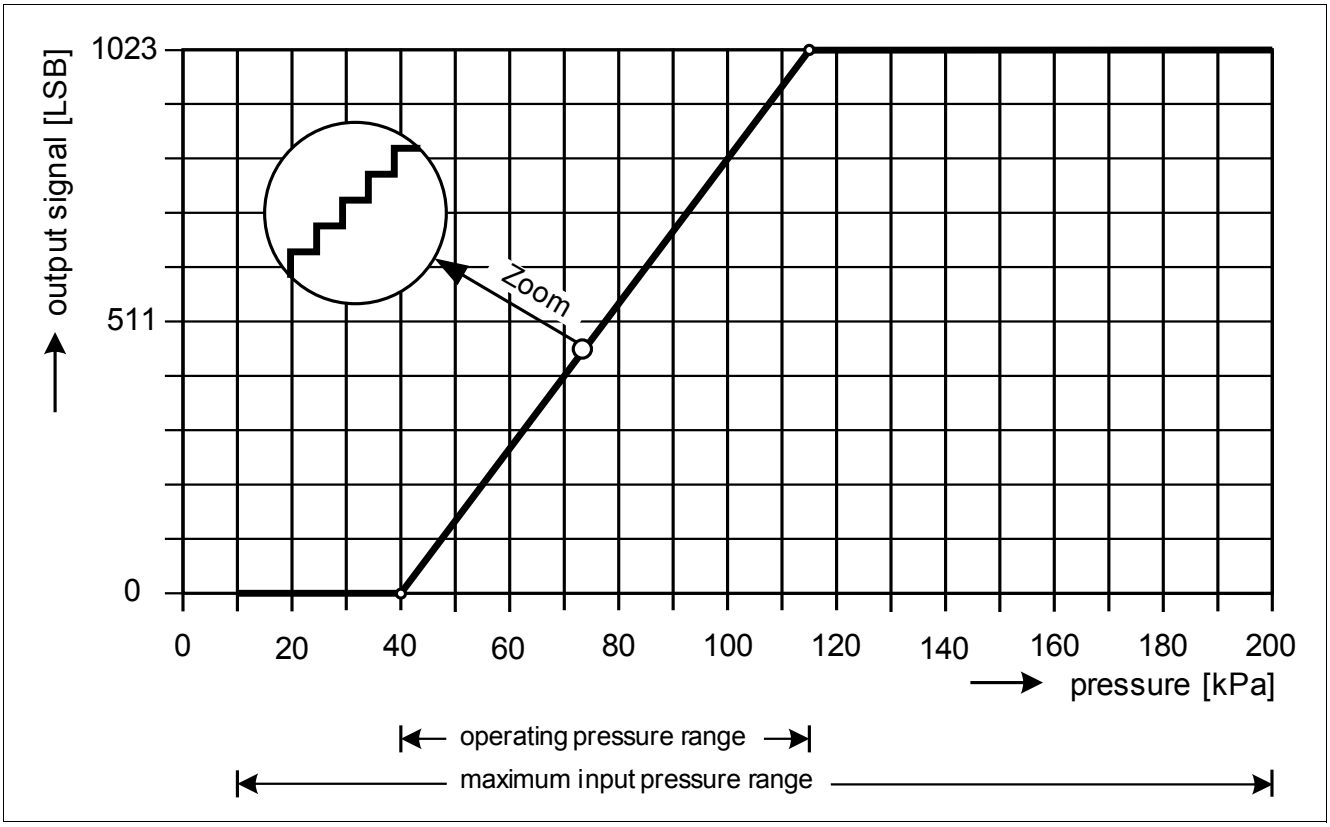

Figure 3 Pressure transfer function

2.4.1 Pressure Transfer Function Characteristics

The following calibration is adjusted with the parameters S_p and $offs_p$

$$p_{amb} = \frac{out_p - offs_p}{S_p}$$

Table 2 Pressure transfer function characteristics

Pressure			Output Code				Gain and Offset		
Symbol	**Values**	**Unit**	**Symbol**	**Values**	**Unit**		**Symbol**	**Value**	**Unit**
$p_{IN,1}$	40	kPa	$LSB_{OUT,1}$	0	LSB		Sp	13.64	LSB/kPa
$p_{IN,2}$	115	kPa	$LSB_{OUT,2}$	1023	LSB		offsp	-545.6	LSB

Note: The points $p_{IN,1}/LSB_{OUT,1}$ and $p_{IN,2}/LSB_{OUT,2}$ define the calibrated transfer function and not the operating range. The operating pressure range is defined by the parameter 2.8 "Ambient operating pressure range" on Page 22

2.4.2 Accuracy

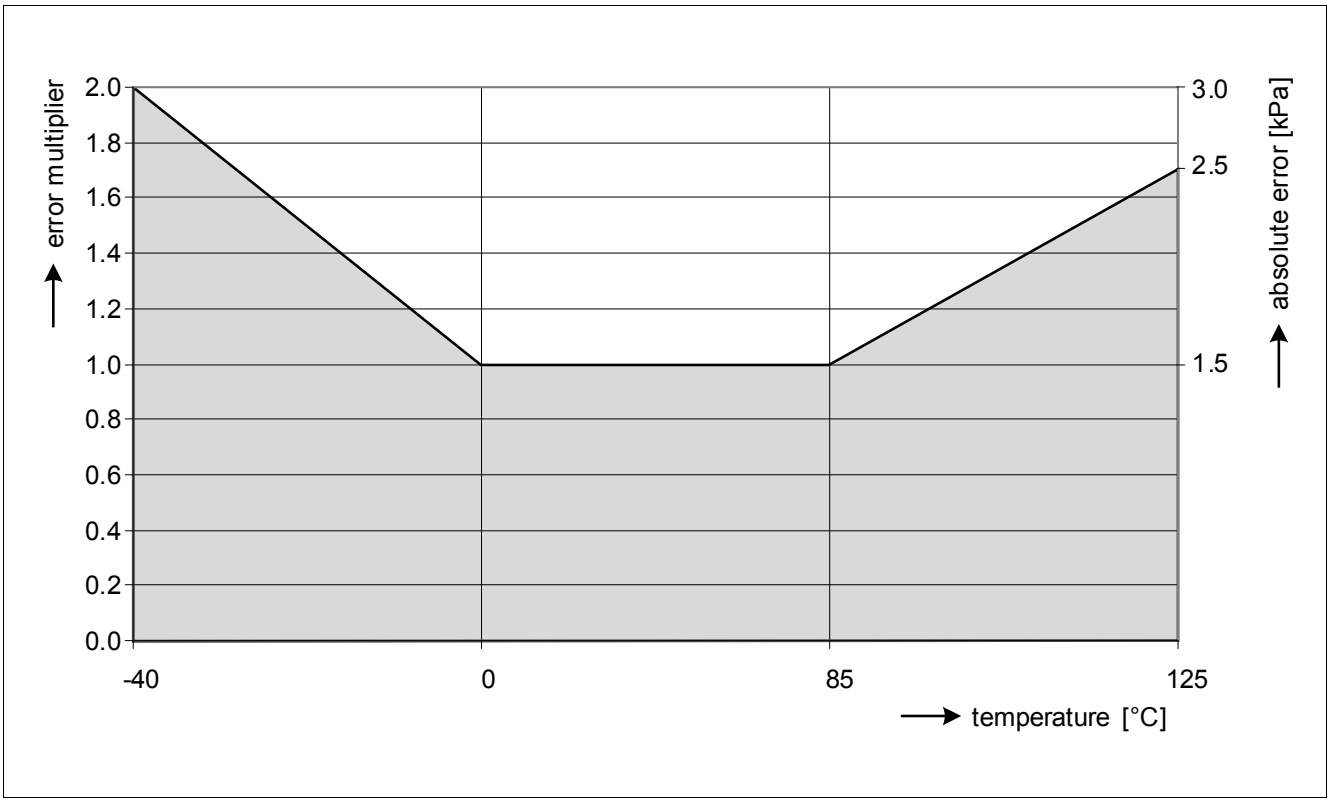

Figure 4 Accuracy for pressure acquisition

2.5 Transfer Function Temperature

Triggering the temperature command (see **Section 2.6.1.4**) the KP254 provides the ambient temperature.

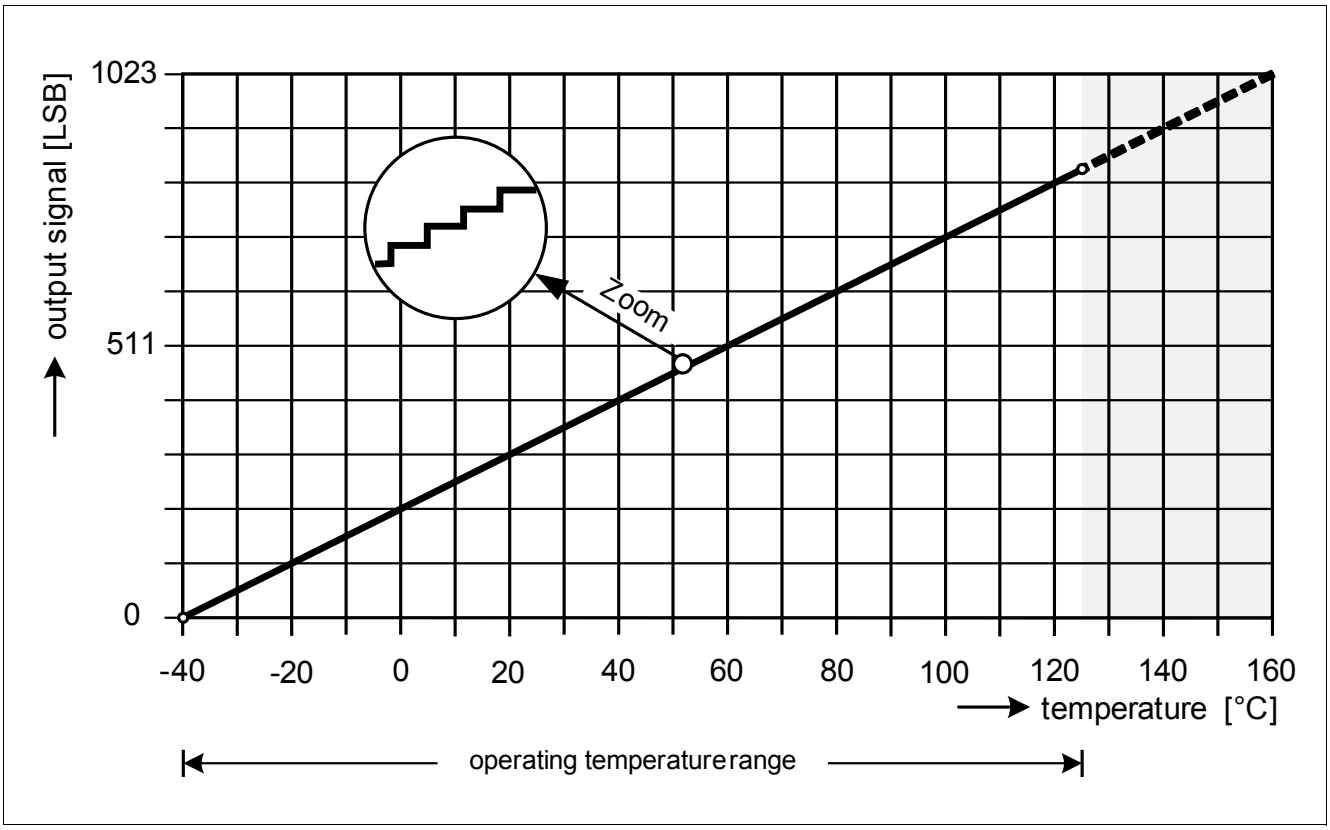

Figure 5 Temperature transfer function (V_{DD} = 5.0 V)

2.5.1 Temperature Transfer Function Characteristics

The following calibration is adjusted with the parameters S_T and $offs_T$:

$$T_{amb} = \frac{out_T - offs_T}{S_T}$$

Table 3 Temperature transfer function characteristics

Temperature			Output Code				Gain and Offset		
Symbol	**Values**	**Unit**	**Symbol**	**Values**	**Unit**		**Symbol**	**Value**	**Unit**
$T_{IN,1_5.0}$ [1]	-40	°C	$LSB_{OUT,1}$	0	LSB		ST	5.115	LSB/°C
$T_{IN,2_5.0}$ [1]	160	°C	$LSB_{OUT,2}$	1023	LSB		offsT_3.3 [2] $offs_{T_5.0}$ [1]	209.6 204.6	LSB LSB

1) Valid for V_{DD} = 5.0 V
2) Valid for V_{DD} = 3.3 V

Note: The points $T_{IN,1}/LSB_{OUT,1}$ and $T_{IN,2}/LSB_{OUT,2}$ define the calibrated transfer function and not the operating range. The operating temperature range is defined by the parameter 2.7 "Operating temperature" on Page 22

2.6 Serial Interface

The communication and data transmission is based on a standard 16 bit serial peripheral interface (SPI).

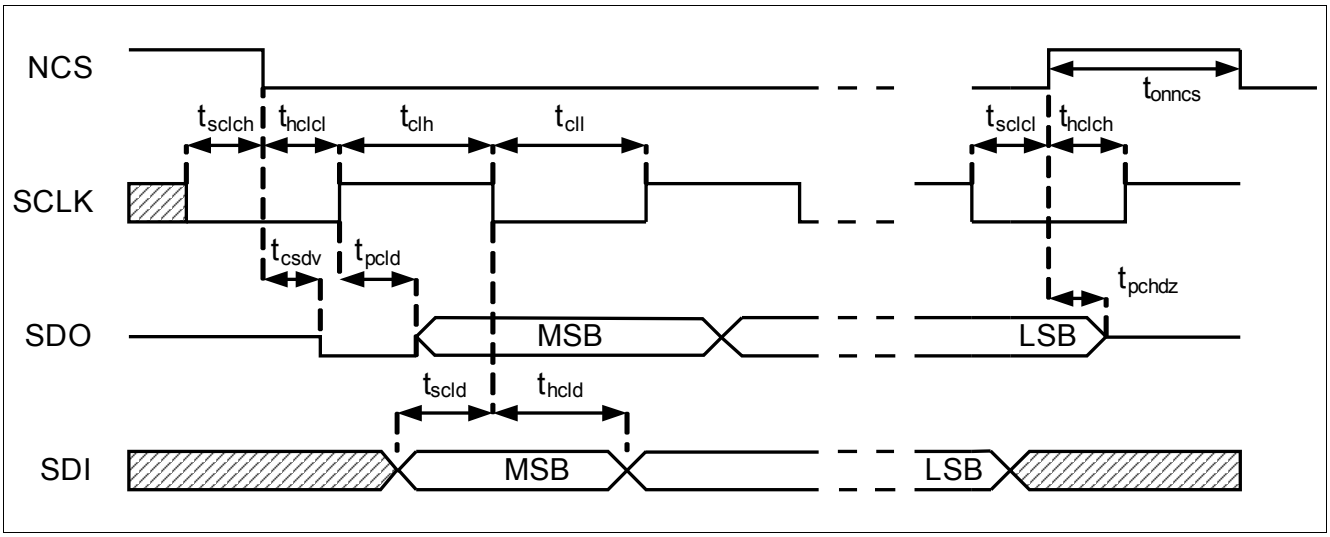

Figure 6 SPI timing

2.6.1 Commands

The following Commands are defined:

- Acquire identifier
- Acquire pressure (incl. the diagnosis pressure out of range, E^2PROM check and last updated Diag1 & Diag2)[1)]
- Acquire temperature (incl. the diagnosis pressure out of range, E^2PROM check and last updated Diag1 & Diag2)[1)]
- Trigger diagnosis (triggers Diag1 and Diag2)
- Trigger test mode (entry into test mode only occurs if this is the first command received after power up, in conjunction with a high voltage level (>10V) on pin V_{PROG})

2.6.1.1 Command Behavior

The SPI command interpretation is based on following rules:

- The response to command N is the result of the previous command (N-1)
- The response to the first command is the identifier
- When a command (N) is sent and the processing of the previous command (N-1) has not finalized, the last command (N) will not interrupt the processing
- Max. one command is stacked (during processing a command a new received command is stacked; further received commands will overwrite the stack)
- If a command has finished, the sensor takes the next command from the stack; if no command is in the stack, the sensor goes into the pressure measurement mode

1) Last updated diagnosis information is only available if the **Trigger diagnosis command** was sent at any time before and the diagnostic reset is not active (Reset-bit C12 = '1', see **Chapter 2.8.1**).

- The diagnosis command triggers the Diag1 and Diag2 measurement; during this time pressure values (including out of range information) will not be updated
- Pressure and temperature values can be updated continuously based on a parallel acquisition

2.6.1.2 Structure

The following structure is defined for an SPI command:

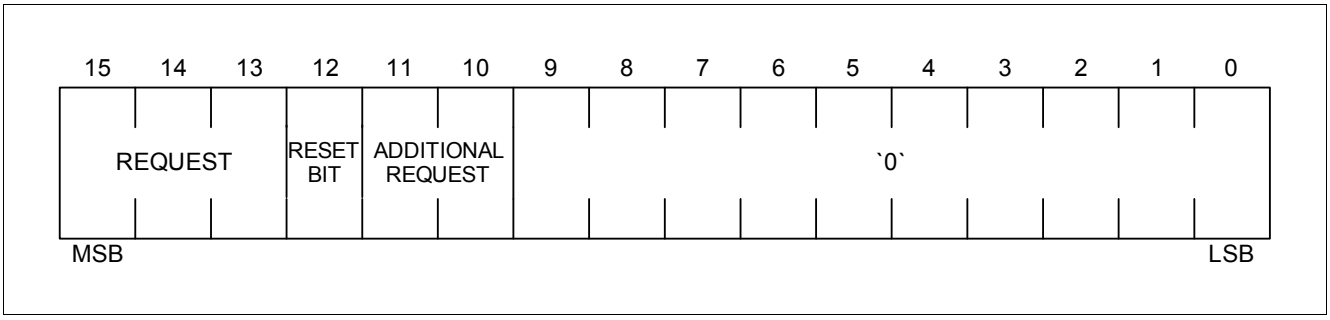

Figure 7 SPI command structure

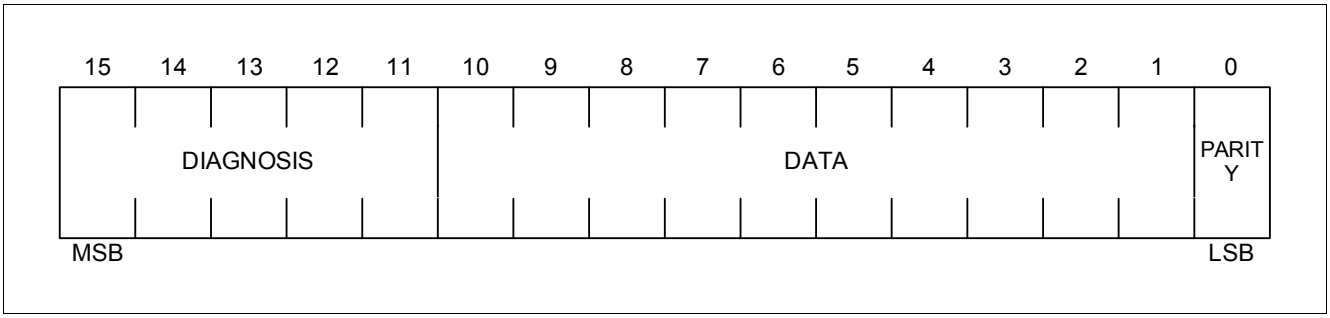

Figure 8 SPI response structure

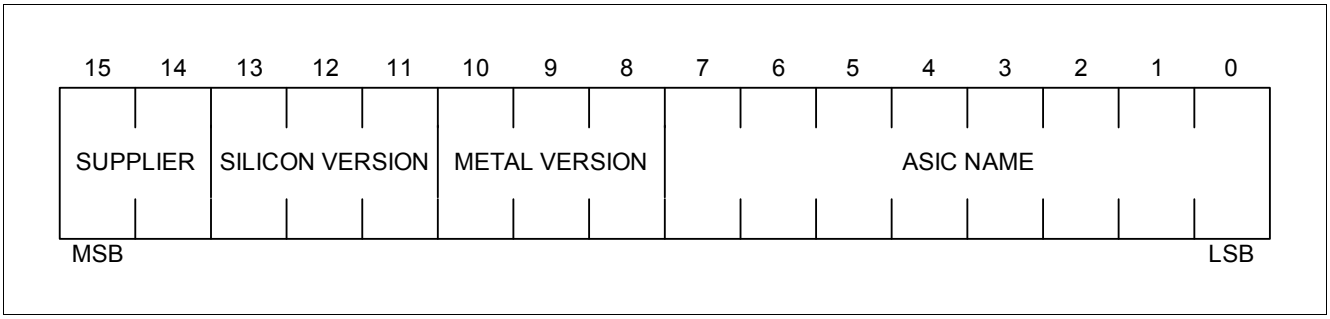

Figure 9 SPI response structure for identifier

2.6.1.3 Parity

Except for the identifier response (see **Section 2.6.1.6**) every SPI response (including the **Communication Error** response, see **Section 2.6.1.5**) includes an odd parity (LSB, [0]). The number of bits with the value one in the 16 bit response is odd (including the parity bit).

2.6.1.4 Command Definition

15	14	13	12	11	10	9	8	7	6	5	4	3	2	1	0
0	0	1	X	0	0	0	0	0	0	0	0	0	0	0	0

Figure 10 Acquire pressure command

15	14	13	12	11	10	9	8	7	6	5	4	3	2	1	0
0	1	0	X	0	0	0	0	0	0	0	0	0	0	0	0

Figure 11 Acquire temperature command

15	14	13	12	11	10	9	8	7	6	5	4	3	2	1	0
1	0	0	X	0	0	0	0	0	0	0	0	0	0	0	0

Figure 12 Trigger diagnosis command

15	14	13	12	11	10	9	8	7	6	5	4	3	2	1	0
1	1	1	X	0	0	0	0	0	0	0	0	0	0	0	0

Figure 13 Acquire identifier command

Note: The Reset-bit (C12) determines how the diagnostic reset is handled. For details about the function of the Reset-bit refer to Chapter 2.8.1.

The “trigger test mode” command is only for information. The test mode is only for calibration and E^2PROM programming. Both are already done during the supplier’s back-end assembly. The information should serve to avoid command for unintentional test mode operation.

Note: Additional safeguards are provided to prevent unintentional test mode operation. For test mode operation, the command must be the first command after power-up in combination with a high voltage level at pin V_{PROG}.

15	14	13	12	11	10	9	8	7	6	5	4	3	2	1	0
0	0	0	0	1	1	0	0	0	0	0	0	0	0	0	0

Figure 14 Trigger test mode command

2.6.1.5 Communication Error

In normal operation only the pressure, temperature, diagnosis and identifier commands are valid. Every abnormality of these commands (e.g. unused command, other value of unused bits, number of clocks not equal to 16n with n = 1, 2, 3...) will result in a communication error. The response to a detected communication error is given below.

15	14	13	12	11	10	9	8	7	6	5	4	3	2	1	0
0	0	0	0	0	0	0	0	0	0	0	0	0	0	0	1

Figure 15 Response after a communication error

2.6.1.6 Identifier Response Definition

The response to an **Acquire identifier command** is a fixed value as stated below. With this response, the KP254 sensor can be indentified when operated in a bus system with several different parts.

15	14	13	12	11	10	9	8	7	6	5	4	3	2	1	0
0	1	0	1	0	0	0	1	0	0	1	1	0	1	1	1

Figure 16 Identifier response definition

2.6.2 Single Device Operation

Figure 17 shows an example on how to connect a singe device to a microcontroller.

After NCS is pulled to low, the request command is sent to the sensor with the next 16 cycles of the CLK. The response of the sensor for the previous request command is returned at the same time. The SPI signal timing is shown in **Figure 18**.

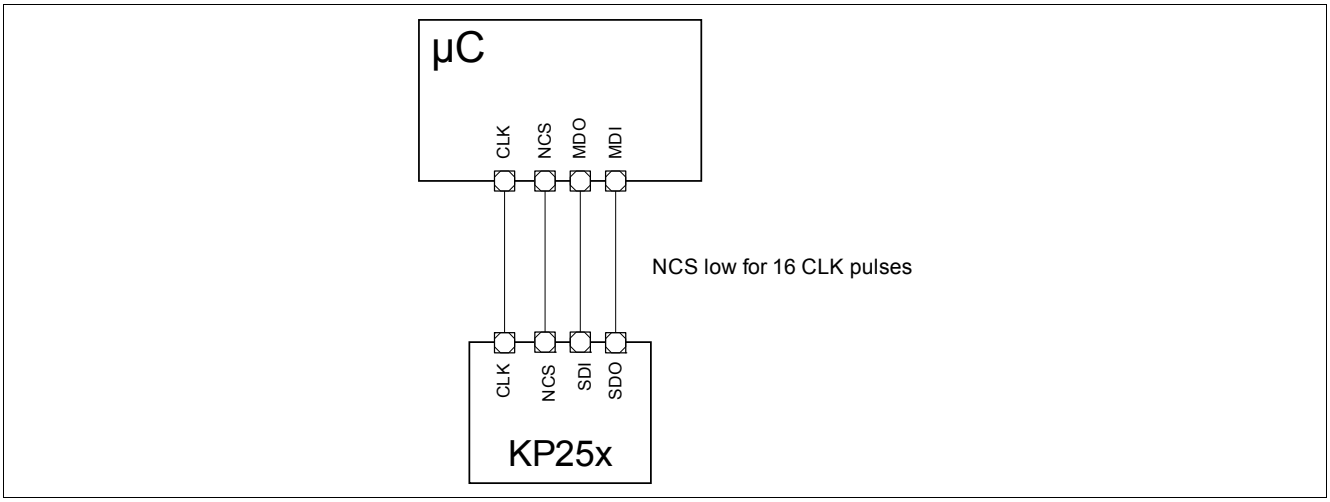

Figure 17 Example for single device operation

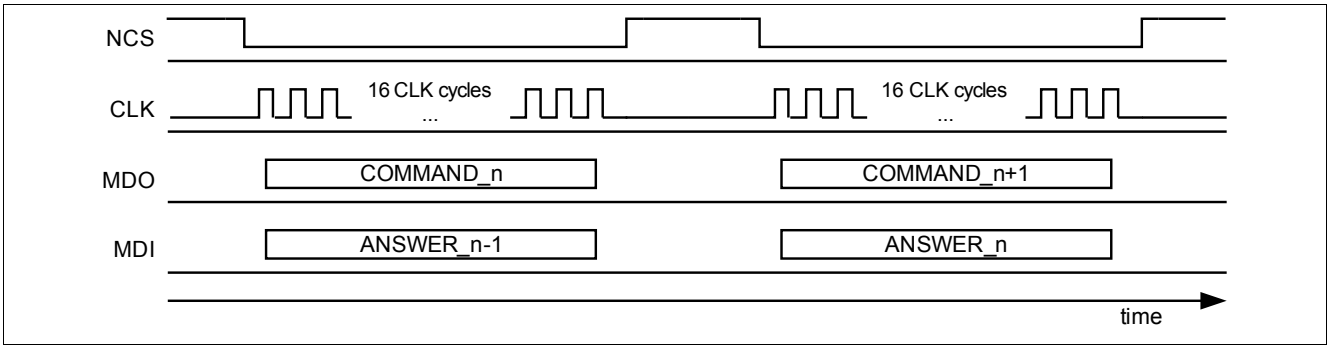

Figure 18 Example for single device signal timing

2.6.3 Daisy Chain Operation

The sensors can be connected to one SPI connection in daisy chain operation to save microcontroller pins. The number of sensors connected in daisy chain operation is unlimited.

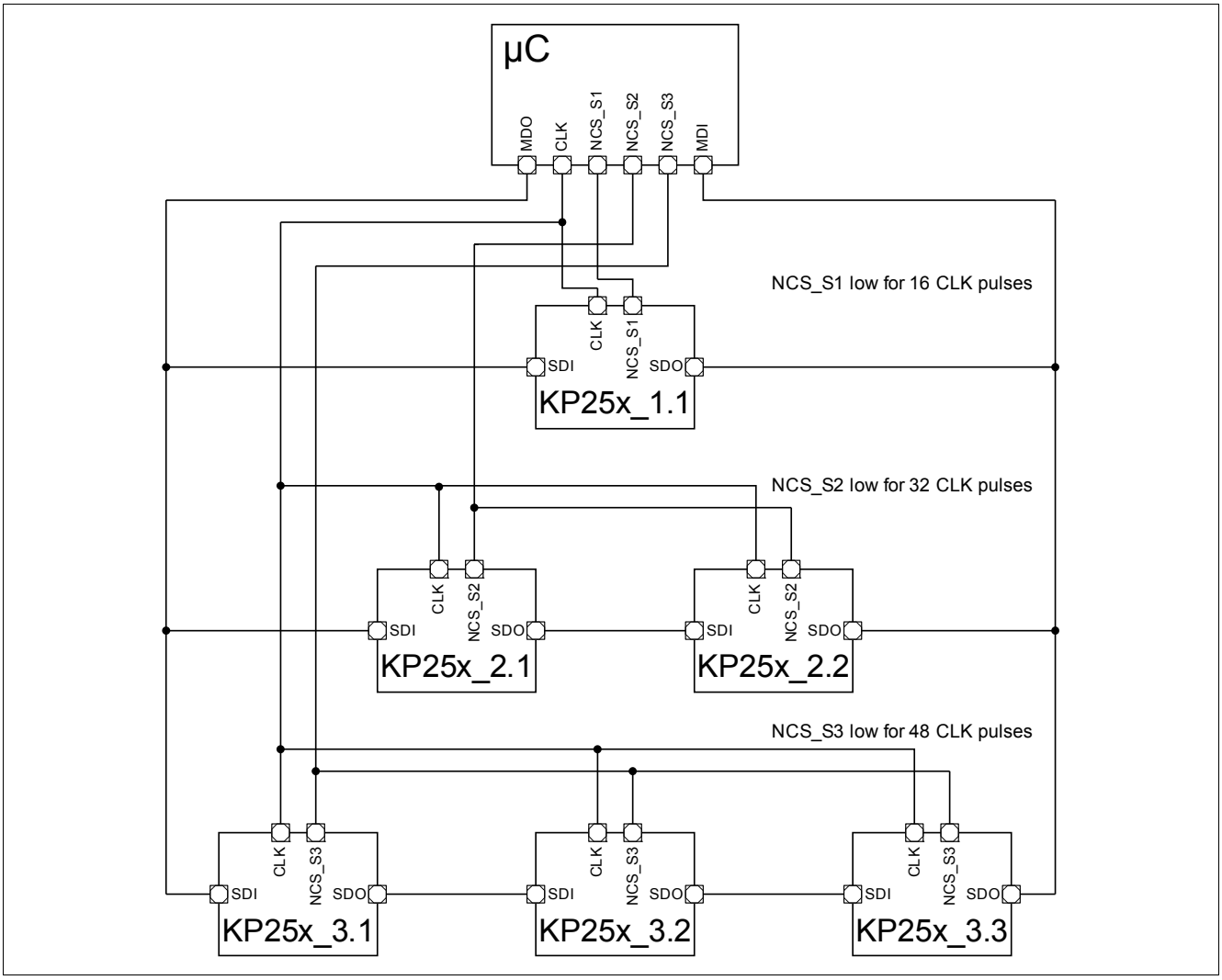

Figure 19 Example for daisy chain operation

Figure 19 shows an example of a combination of daisy chain mode and parallel operation.

Note: Not all five sensors in this example could be addressed at once. Only one branch can be addressed at once (e.g. the KP25x_2.x branch). Finally only one NCS line can be low at the same time (NCS_S1, NCS_S2 or NCS_S3).

The responding NCS line for the addressed sensor group must be low during the complete communication. During this time the provided number of clock pulses must be the multiplication result of 16 times the number of sensors in a daisy chain (e.g. 32 clock pulses for the KP25x_2.x branch in **Figure 19**)
Figure 20 shows the whole signal diagram. It is important that NCS_S2.1 and NCS_S2.2 stay at the low level during the complete transmission. Therewith the sensor is able after receiving more than 16 clock pulses without a change in the NCS signal to switch automatically in daisy chain mode (in this example the first received 16 bit input data by the sensor S2.1 will be clocked to the output of sensor S2.1 with the last 16 clock pulses).

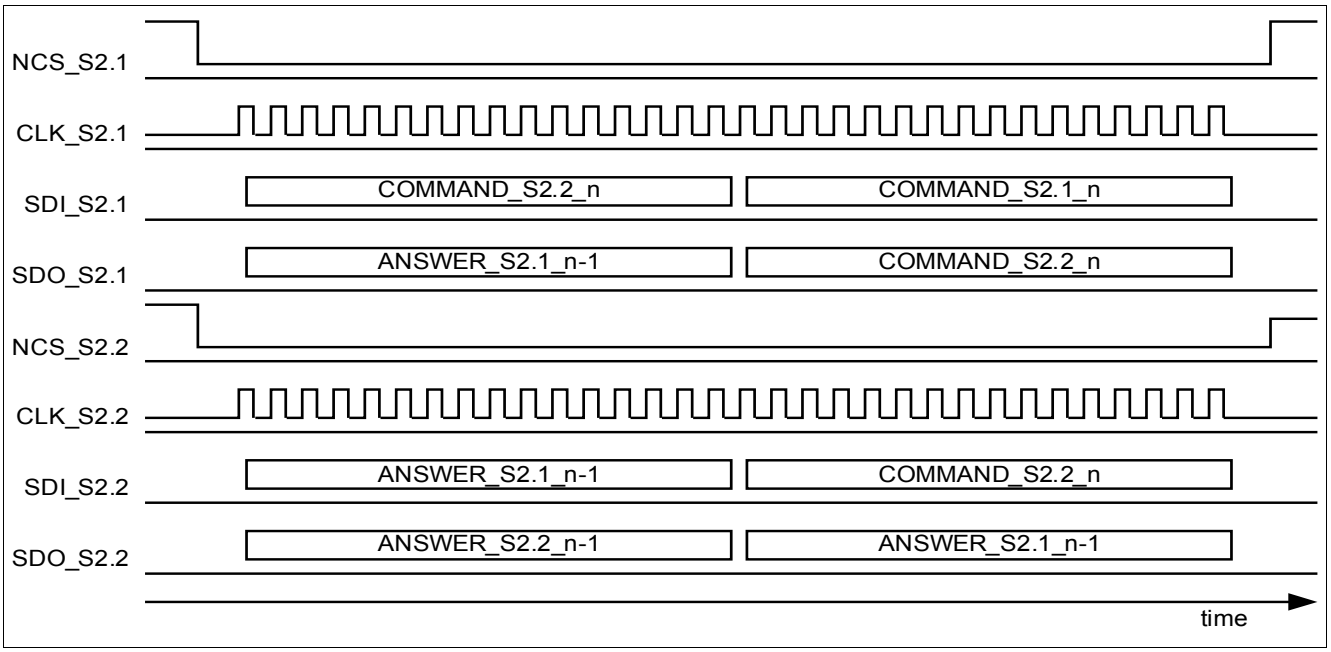

Figure 20 Example for daisy chain signal diagram

It is important that the number of clock pulses is a multiple of 16. Otherwise all commands for a daisy chain branch will be identified as invalid commands and the response of all sensors on this branch will be 01_H.

2.7 Start-up Behavior

During the start-up phase ($t_{start\text{-}up}$), there is no response on any commands.

2.8 Diagnosis

The sensor is able to detect automatically the following malfunctions:

- Pressure out of range
- Signal path check (Diag1)
- Sensor cell check (Diag2)
- E^2PROM check

If a malfunction is detected, the responding diagnosis code is sent with the next response.

Note: The Diag1 and Diag2 test can only be triggered by a separate SPI command.

If more than one test fails, only that diagnosis code with the highest priority will be sent.

Table 4 Diagnosis codes

Failure	Priority	Diagnosis Code				
E^2PROM: FEC error	1	1	0	0	0	0
Acquisition chain failure: Diag1[1)]	2	0	1	0	0	0
Sensor cell failure: Diag2[1)]	3	0	0	1	0	0
Pressure out of range: High	4	0	0	0	1	0
Pressure out of range: Low	5	0	0	0	0	1
No error		0	1	0	1	0

1) Note: This diagnosis code is not valid until a self diagnosis is triggered by sending the **Trigger diagnosis command**.

2.8.1 Diagnostic Reset

The Reset-bit (C12) of a SPI command allows using different reset strategies:

- C12 = ‘0‘: All detected failures will be reset (with the exeption of FEC error
- C12 = ‘1‘: A detected failure will not be reset

Reset of FEC error is not possible. Once FEC error is detected and transmitted it remains until supply reset.

2.8.1.1 Reset-bit C12 = ‘0‘

A detected failure is only transmitted by the responding diagnosis code as long as the failure is present. The diagnosis code will be reset after once transmitted. Only if the failure is detected again, the diagnosis code will be transmitted again with the next response.

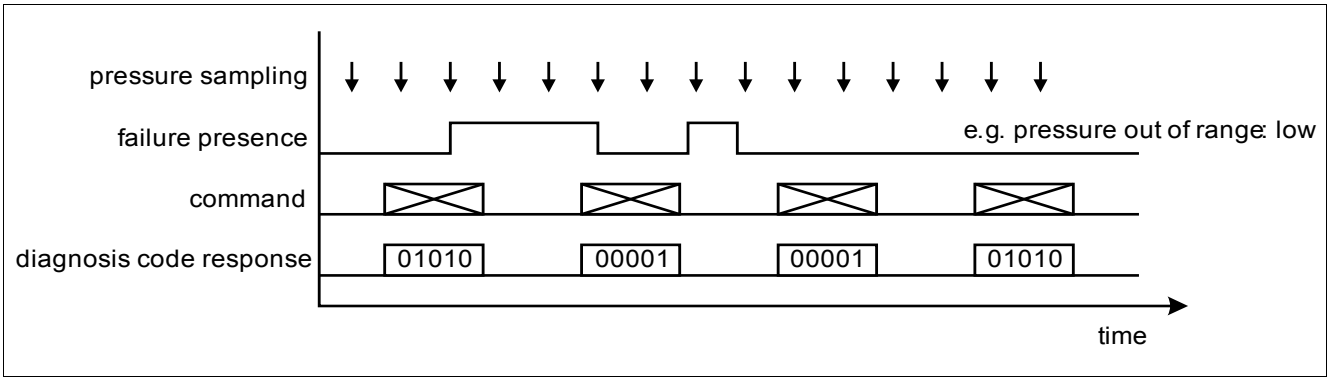

Figure 21 Example for reset strategy Reset-bit C12 = ‘0‘

2.8.1.2 Reset-bit C12 = ‘1‘

Once a failure is detected the responding diagnosis code will be transmitted as long as:

- A failure with a higher priority is not detected
- The sensor is not reset (power down)
- Independent of the presence of the failure

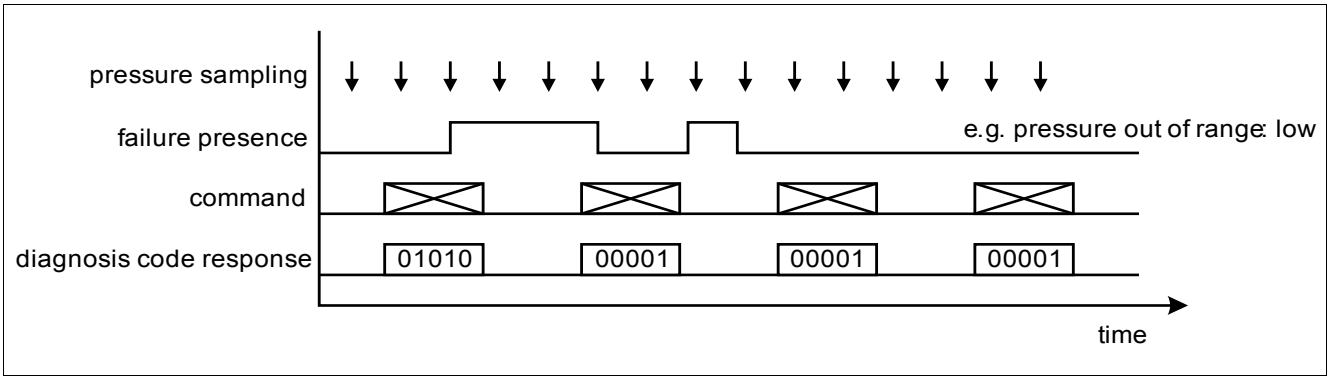

Figure 22 Example for reset strategy Reset-bit C12 = '1'

2.8.2 Pressure out of Range

The measured pressure is internally checked. If the pressure value falls below the lower limit or exceeds the higher limit the responding diagnosis code will be set. The limits are defined in **Table 10 "Transfer function" on Page 25**

2.8.3 Diag1

The Diag1 test checks the functionality of the signal path. Therefore the inputs of the sigma delta ADC are shorted. Afterwards, the system response is compared with the expected range (~ 50% of full scale range). If the system response is out of range, the diagnosis code is set.

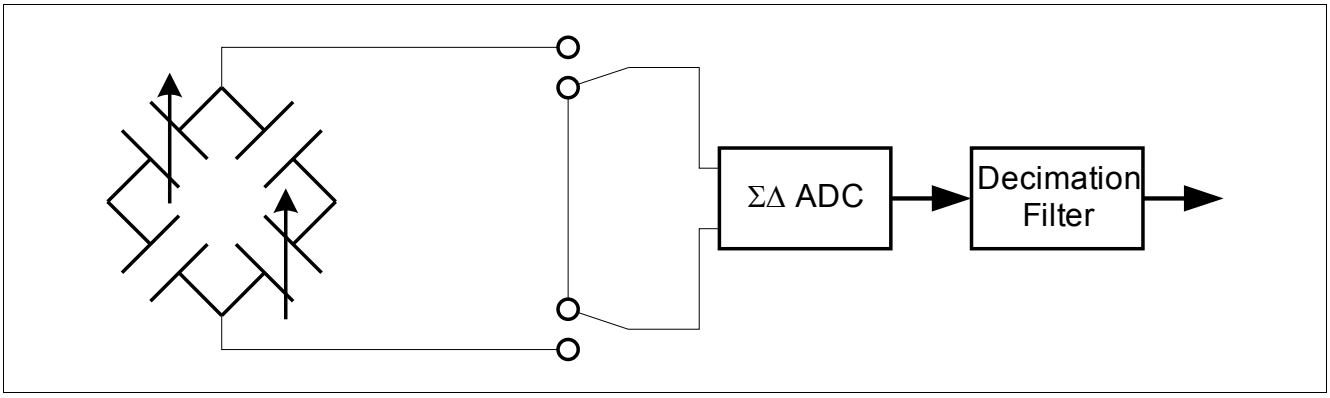

Figure 23 Diag1 functionality

2.8.4 Diag2

The Diag2 test checks the functionality of the pressure sensor cells. Therefore a malfunction (e.g. broken membrane) can be detected. The KP254 pressure sensing element is made of 2 measuring cells and 2 reference cells. In the normal mode these four cells are connected in a Wheatstone bridge configuration. In the Diag2 mode, the connection of the cells is modified as shown in **Figure 24**.

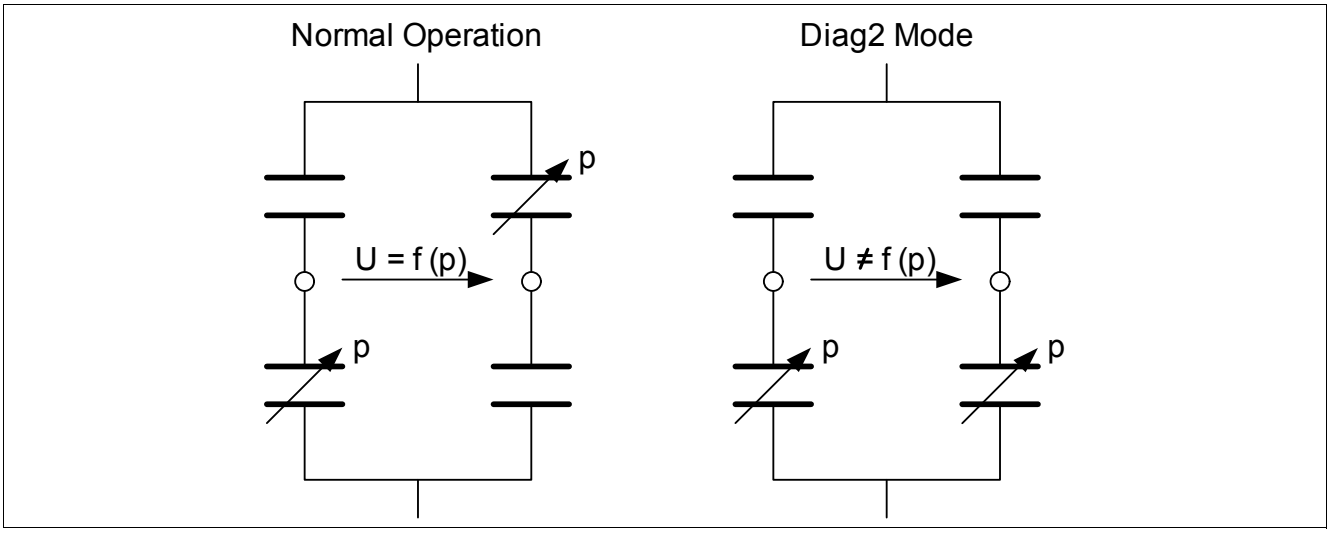

Figure 24 Diag2 functionality

2.8.5 E²PROM Check

During the initialization phase, and after receiving a SPI command, the content of the E²PROM cells is copied into the corresponding E²PROM registers. Thereby, a parity check is done based on the parity row and column. A one bit error is corrected by the forward error correction. Any additional bit error results in an FECerror. In that case the diagnosis code 1 will be transmitted with the next response

3 Specification

3.1 Application Circuit Example

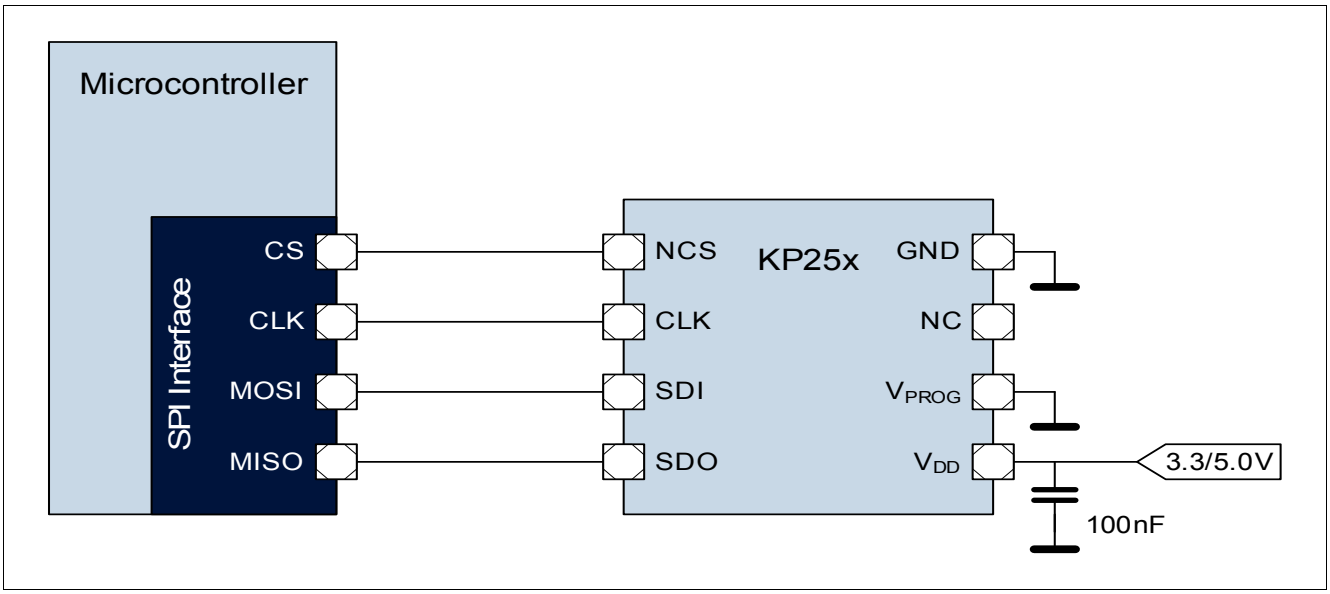

Figure 25 Application circuit example

Table 5 Component values

Component	Symbol	Values			Unit
		Min.	Typ.	Max.	
Supply Blocking Capacitor[1)]	C_1	30[2)]	100	–	nF

1) The use of a blocking capacitor with a nominal value of 100nF is mandatory; any drift or tolerances in capacity of standard capacitors are already considered. To avoid any measurement inaccuracy the supply blocking capacitor has to be placed as close as possible to the VDD pin, at least the distance must be less than 10 mm.

2) The minimum capacity including any variations or drift over lifetime must not undershoot this value.

3.2 Absolute Maximum Ratings

Table 6 Absolute maximum ratings

Parameter	Symbol	Values			Unit	Note or Test Condition	Number
		Min.	Typ.	Max.			
Voltage on any pin	V_{max}	-0.3	–	5.5 6.0	V V	– Limited time: Max. 300 s	1.1
Voltage at output pins	V_{max_out}	-0.3	–	VDD + 0.3	V	–	1.2
Storage temperature	T_S	-40	–	125	°C	–	1.3
Thermal resistance	$R_{thj\text{-}pin}$	–	–	180	K/W	Thermal resistance between the die and the pins	1.4
Maximum input pressure	p_{amb_max}	10	–	200 600	kPa kPa	 Limited time: Max. 300 s	1.5

Attention: ***Stresses above the max. values listed in Table 6 "Absolute maximum ratings" may cause permanent damage to the device. Exposure to absolute maximum rating conditions for extended periods may affect device reliability. Maximum ratings are absolute ratings; exceeding only one of these values may cause irreversible damage to the integrated circuit.***

3.3 Operating Range

The following operating conditions must not be exceeded in order to ensure correct operation of the device. All parameters specified in the following sections refer to these operating conditions, unless noted otherwise.

Table 7 Operating range

Parameter	Symbol	Values			Unit	Note or Test Condition	Number
		Min.	Typ.	Max.			
Supply voltage	$V_{DD3.3}$ $V_{DD5.0}$	3.135 4.75	– –	3.475 5.25	V V		2.1
Supply voltage power up/power down gradient	V_{grad}	1E-5	–	1E4	V/ms		2.2
Input voltage for low level at pins NCS, CLK & SDI	V_{low_in}	-0.3	–	0.8	V		2.3
Input voltage for high level at pins NCS, CLK & SDI	V_{high_in}	2.0	–	5.5	V	Even with the supply voltage of $V_{DD3.3_min}$ the max. input voltage V_{high_in} is allowed; back biasing will not happen	2.4
Output voltage for low level at pin SDO	V_{low_out}	–	–	0.4	V	Test current at pin SDO is 2.0mA	2.5
Output voltage for high level at pin SDO	V_{high_out}	VDDx.x - 0.4	–	VDDx.x	V	Test current at pin SDO is 1.5mA	2.6
Operating temperature	T_a	-40	–	+125	°C		2.7
Ambient operating pressure range	p_{amb}	40	–	115	kPa		2.8
Lifetime[1)]	t_{live}	15	–	–	years		2.9

1) The life time shall be considered as anticipation with regard to the product that shall not extend the agreed warranty period.

3.4 Characteristics

Product characteristics involve the spread of values guaranteed within the specified voltage and ambient temperature range. Typical characteristics are the median of the production.

Table 8 Electrical characteristics

Parameter	Symbol	Values			Unit	Note or Test Condition	Number
		Min.	Typ.	Max.			
Supply current into VDD	I_{VDD}	–	–	10.0	mA		3.1
Internal pressure update rate	f_{update}	150	–	–	kHz		3.2
Pressure signal path settling time	t_{path_pres}	–	–	5	ms		3.3a
Temperature signal path settling time	t_{path_pres}	–	–	15	ms		3.3b
Start-up time	$t_{start\text{-}up}$	–	–	10	ms	no response on SPI commands during the start-up time	3.4
Resolution of pressure transmission	n_{res_pres}	n.a.	10	n.a.	bits		3.5
Resolution of temperature transmission	n_{res_temp}	n.a.	10	n.a.	bits		3.6
Capacitive load at pins NCS, CLK & SDI	C_{load_in}	–	–	14	pF		3.7
Capacitive load at pin SDO	C_{load_out}	–	–	19	pF		3.8
Tri state leakage current	I_{SDO}	-5	–	5	µA	NCS = high V_{DD} = 5V	3.9
Hysteresis of input voltage at pins NCS, CLK & SDI	V_{SPI_Hys}	200	–	–	mV		3.10
Current sink for NCS, CLK & SDI (each pin)	I_{SPI_in}	-100 –	– –	-5 5	µA µA	@ V_{low_in} = 0 V @ V_{high_in} = 5 V no back biasing	3.11

Table 9 SPI timing

Parameter	Symbol	Values			Unit	Note or Test Condition	Number
		Min.	Typ.	Max.			
Clock frequency of SPI interface	f_{SPI}	0.1	–	5	MHz	No limitation with lower frequencies, but not subject to production test	4.1
Transmission speed at SDO (20% - 80%)	t_{SDO_trans}	5 5	– –	30 50	ns ns	V_{SDO} = 5V & C_{load} = 50pF V_{SDO} = 5V & C_{load} = 150pF	4.2
Clock high time	t_{clh}	75	–	–	ns		4.3
Clock low time	t_{cll}	75	–	–	ns		4.4
NCS filter time[1)]	t_{fNCS}	10	–	60	ns	Pulses below the NCS filter time will be ignored	4.5
Delay between NCS falling edge and SDO changing from tri-state to low	t_{csdv}	–	–	75	ns		4.6
Delay between CLK rising edge and start SDO data	t_{pcld}	–	–	50	ns	incl. t_{SDO_trans}	4.7
Delay between CLK low and start NCS low	t_{sclch}	75	–	–	ns		4.8
Delay between NCS low and rising edge 1st CLK pulse	t_{hclcl}	75	–	–	ns		4.9
Time between start SDI data and falling edge CLK	t_{scld}	15	–	–	ns		4.10
Time between falling edge CLK and end SDI data	t_{hcld}	15	–	–	ns		4.11
Delay between falling edge lst CLK pulse and rising edge NCS	t_{sclcl}	100	–	–	ns		4.12

Table 9 SPI timing (cont'd)

Parameter	Symbol	Values			Unit	Note or Test Condition	Number
		Min.	Typ.	Max.			
Delay between rising edge NCS and rising edge CLK pulse	t_{hclch}	100	–	–	ns		4.13
Delay between rising edge NCS and end SDO data	t_{pchdz}	–	–	75	ns		4.14
Time between rising edge NCS and falling edge next NCS	t_{onncs}	300	–	–	ns		4.15

1) not subject to production test - verified by characterization/design

Table 10 Transfer function

Parameter	Symbol	Values			Unit	Note or Test Condition	Number
		Min.	Typ.	Max.			
Sensitivity pressure	Sp	–	13.64	–	LSB /kPa		5.1
Offset pressure	offsp	–	-545.6	–	LSB		5.2
Sensitivity temperature	ST	–	5.115	–	LSB /°C		5.3
Offset temperature	offsT_3.3 $offs_{T_5.0}$	– –	209.6 204.6	– –	LSB LSB	VDD = 3.3 V V_{DD} = 5.0 V	5.4
Accuracy pressure central temperature range	acc_{p_Tmid}	-1.5	–	1.5	kPa	0°C - 85°C	5.5a
Accuracy pressure low temperature range	acc_{p_Tlow}	-3	–	3	kPa	@-40°C	5.5b
Accuracy pressure high temperature range	acc_{p_Thigh}	-2.5	–	2.5	kPa	@125°C	5.5c
Accuracy temperature	acc_T	-5.0	–	5.0	°C	-40°C - 125°C accuracy is referenced to the ambient temperature	5.6

Table 10 Transfer function (cont'd)

Parameter	Symbol	Values			Unit	Note or Test Condition	Number
		Min.	Typ.	Max.			
Pressure out of range: Low	p_{low} p_{low_d}	– –	40 0_d	– –	kPa LSB	Accuracy not considered; below/equal the value the diagnosis code is set	5.7
Pressure out of range: High	p_{high} p_{high_d}	– –	115 1023_d	– –	kPa LSB	Accuracy not considered; above/equal the value the diagnosis code is set	5.8

4 Package Information

For passivation the sensor is covered with a transparent gel.

4.1 PG-DSOF-8-16 Outline

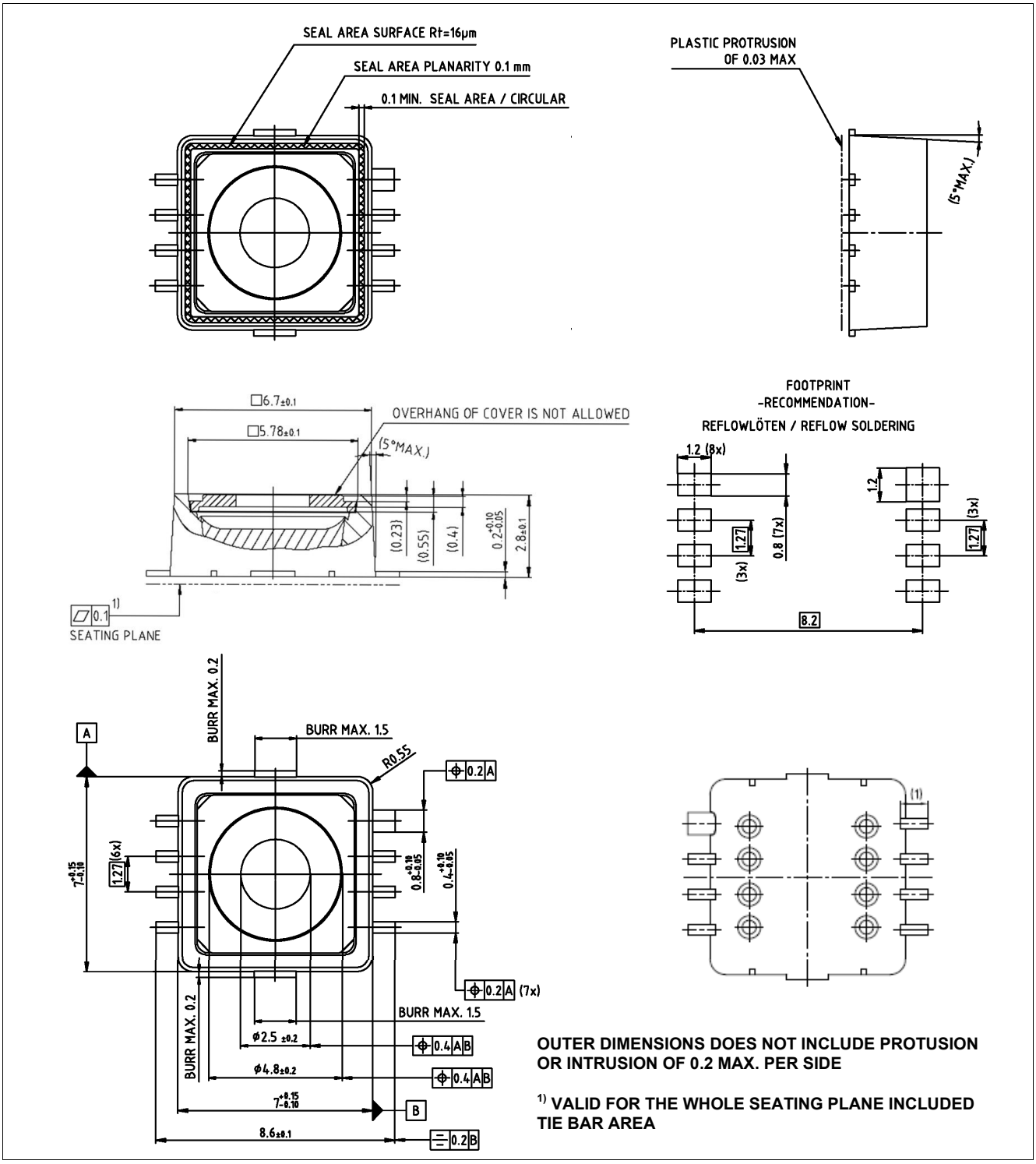

Figure 26 Package outline

Green Product (RoHS compliant)

To meet the world-wide customer requirements for environmentally friendly products and to be compliant with government regulations the device is available as a green product. Green products are RoHS-Compliant (i.e Pb-free finish on leads and suitable for Pb-free soldering according to IPC/JEDEC J-STD-020).

4.2 Identification Code

The identification code is provided in a machine readable format. The date and sales code are provided in human readable format.

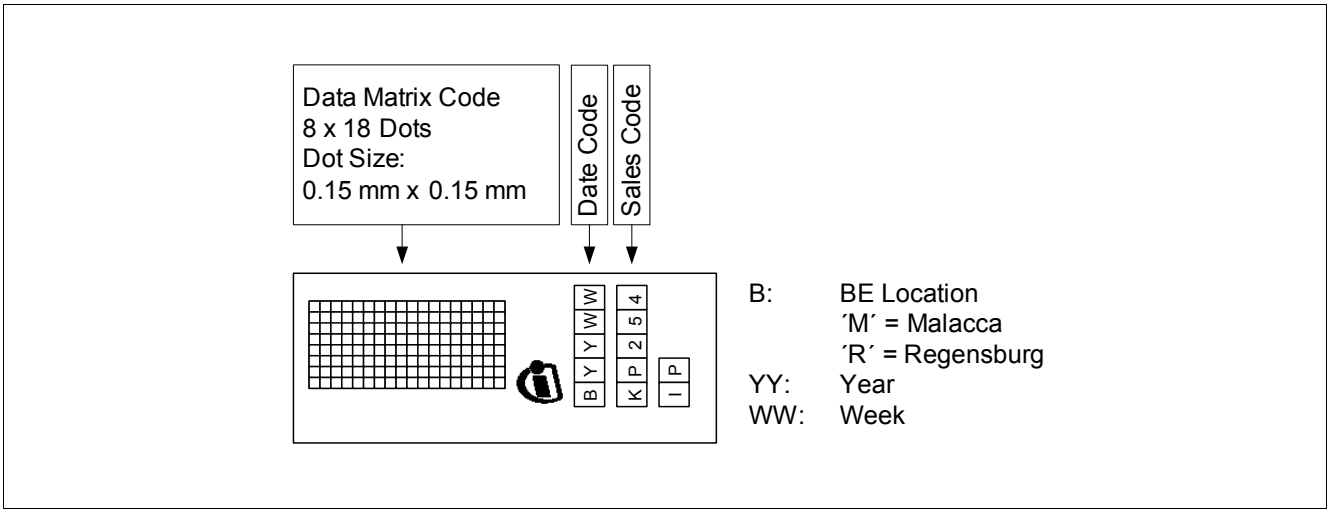

Figure 27 Identification code

The identification code for the KP254 is on the same side of the package as pin 8 (GND).

5 Revision History

KP254 Digital Absolute Pressure Sensor

Revision History: 2015-07-29, Revision 1.1

Previous Revision: Revision 1.0	
Page	**Subjects (major changes since last revision)**
	Design improvement, new ordering code and marking

Trademarks of Infineon Technologies AG

AURIX™, C166™, CanPAK™, CIPOS™, CIPURSE™, CoolMOS™, CoolSET™, CORECONTROL™, CROSSAVE™, DAVE™, DI-POL™, EasyPIM™, EconoBRIDGE™, EconoDUAL™, EconoPIM™, EconoPACK™, EiceDRIVER™, eupec™, FCOS™, HITFET™, HybridPACK™, I²RF™, ISOFACE™, IsoPACK™, MIPAQ™, ModSTACK™, my-d™, NovalithIC™, OptiMOS™, ORIGA™, POWERCODE™, PRIMARION™, PrimePACK™, PrimeSTACK™, PRO-SIL™, PROFET™, RASIC™, ReverSave™, SatRIC™, SIEGET™, SINDRION™, SIPMOS™, SmartLEWIS™, SPOC™, SOLID FLASH™, TEMPFET™, thinQ!™, TRENCHSTOP™, TriCore™.

Other Trademarks

Advance Design System™ (ADS) of Agilent Technologies, AMBA™, ARM™, MULTI-ICE™, KEIL™, PRIMECELL™, REALVIEW™, THUMB™, µVision™ of ARM Limited, UK. AUTOSAR™ is licensed by AUTOSAR development partnership. Bluetooth™ of Bluetooth SIG Inc. CAT-iq™ of DECT Forum. COLOSSUS™, FirstGPS™ of Trimble Navigation Ltd. EMV™ of EMVCo, LLC (Visa Holdings Inc.). EPCOS™ of Epcos AG. FLEXGO™ of Microsoft Corporation. FlexRay™ is licensed by FlexRay Consortium. HYPERTERMINAL™ of Hilgraeve Incorporated. IEC™ of Commission Electrotechnique Internationale. IrDA™ of Infrared Data Association Corporation. ISO™ of INTERNATIONAL ORGANIZATION FOR STANDARDIZATION. MATLAB™ of MathWorks, Inc. MAXIM™ of Maxim Integrated Products, Inc. MICROTEC™, NUCLEUS™ of Mentor Graphics Corporation. MIPI™ of MIPI Alliance, Inc. MIPS™ of MIPS Technologies, Inc., USA. muRata™ of MURATA MANUFACTURING CO., MICROWAVE OFFICE™ (MWO) of Applied Wave Research Inc., OmniVision™ of OmniVision Technologies, Inc. Openwave™ Openwave Systems Inc. RED HAT™ Red Hat, Inc. RFMD™ RF Micro Devices, Inc. SIRIUS™ of Sirius Satellite Radio Inc. SOLARIS™ of Sun Microsystems, Inc. SPANSION™ of Spansion LLC Ltd. Symbian™ of Symbian Software Limited. TAIYO YUDEN™ of Taiyo Yuden Co. TEAKLITE™ of CEVA, Inc. TEKTRONIX™ of Tektronix Inc. TOKO™ of TOKO KABUSHIKI KAISHA TA. UNIX™ of X/Open Company Limited. VERILOG™, PALLADIUM™ of Cadence Design Systems, Inc. VLYNQ™ of Texas Instruments Incorporated. VXWORKS™, WIND RIVER™ of WIND RIVER SYSTEMS, INC. ZETEX™ of Diodes Zetex Limited.

Last Trademarks Update 2011-11-11

www.infineon.com

Edition 2015-07-29

Published by

Infineon Technologies AG

81726 Munich, Germany

© 2014 Infineon Technologies AG.

All Rights Reserved.

Do you have a question about any aspect of this document?

Email: erratum@infineon.com

Document reference

Legal Disclaimer

The information given in this document shall in no event be regarded as a guarantee of conditions or characteristics. With respect to any examples or hints given herein, any typical values stated herein and/or any information regarding the application of the device, Infineon Technologies hereby disclaims any and all warranties and liabilities of any kind, including without limitation, warranties of non-infringement of intellectual property rights of any third party.

Information

For further information on technology, delivery terms and conditions and prices, please contact the nearest Infineon Technologies Office (**www.infineon.com**).

Warnings

Due to technical requirements, components may contain dangerous substances. For information on the types in question, please contact the nearest Infineon Technologies Office. Infineon Technologies components may be used in life-support devices or systems only with the express written approval of Infineon Technologies, if a failure of such components can reasonably be expected to cause the failure of that life-support device or system or to affect the safety or effectiveness of that device or system. Life support devices or systems are intended to be implanted in the human body or to support and/or maintain and sustain and/or protect human life. If they fail, it is reasonable to assume that the health of the user or other persons may be endangered.